SANTOS I-Grind coffee grinder #67
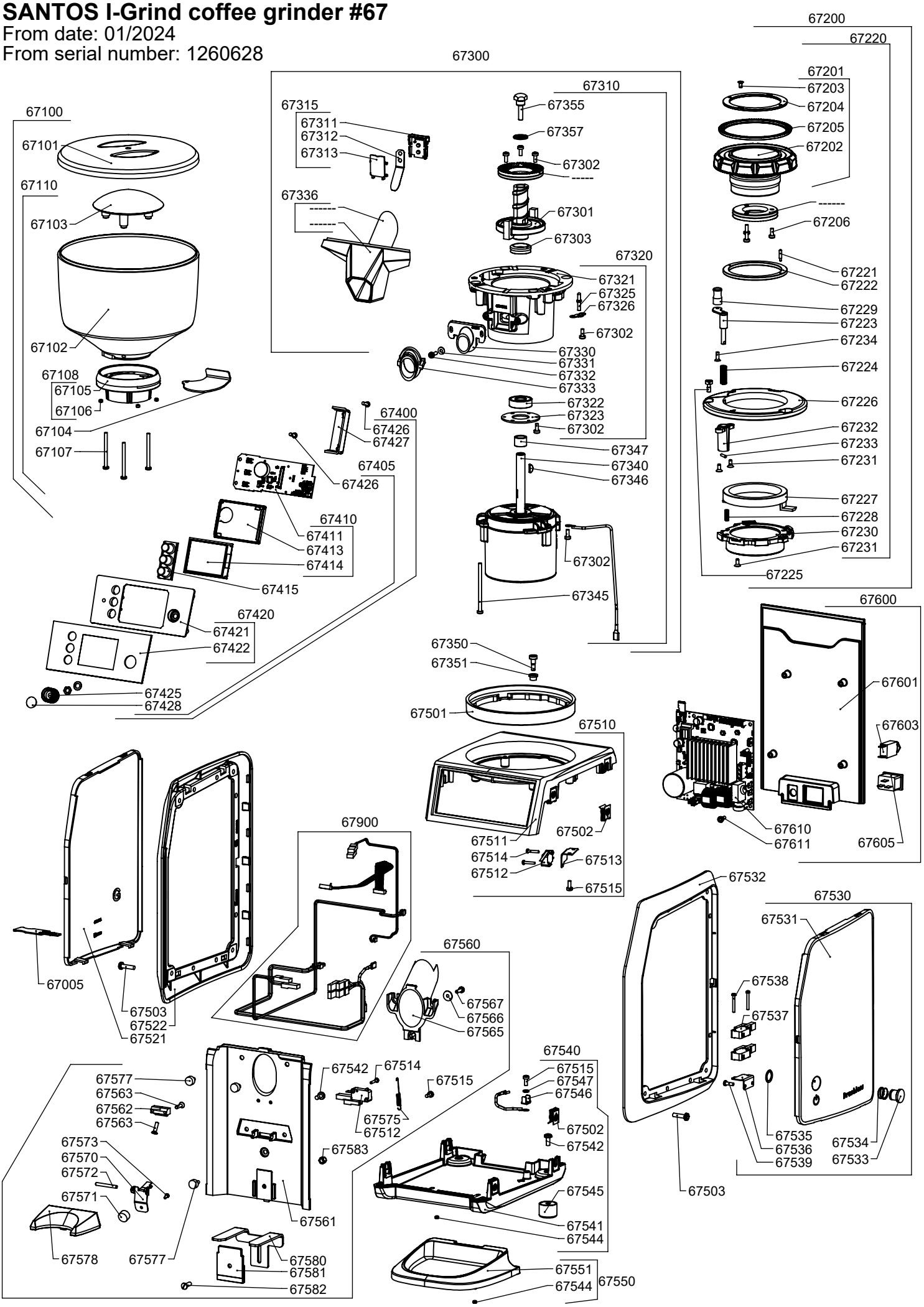
From date: 01/2024
From serial number: 1260628