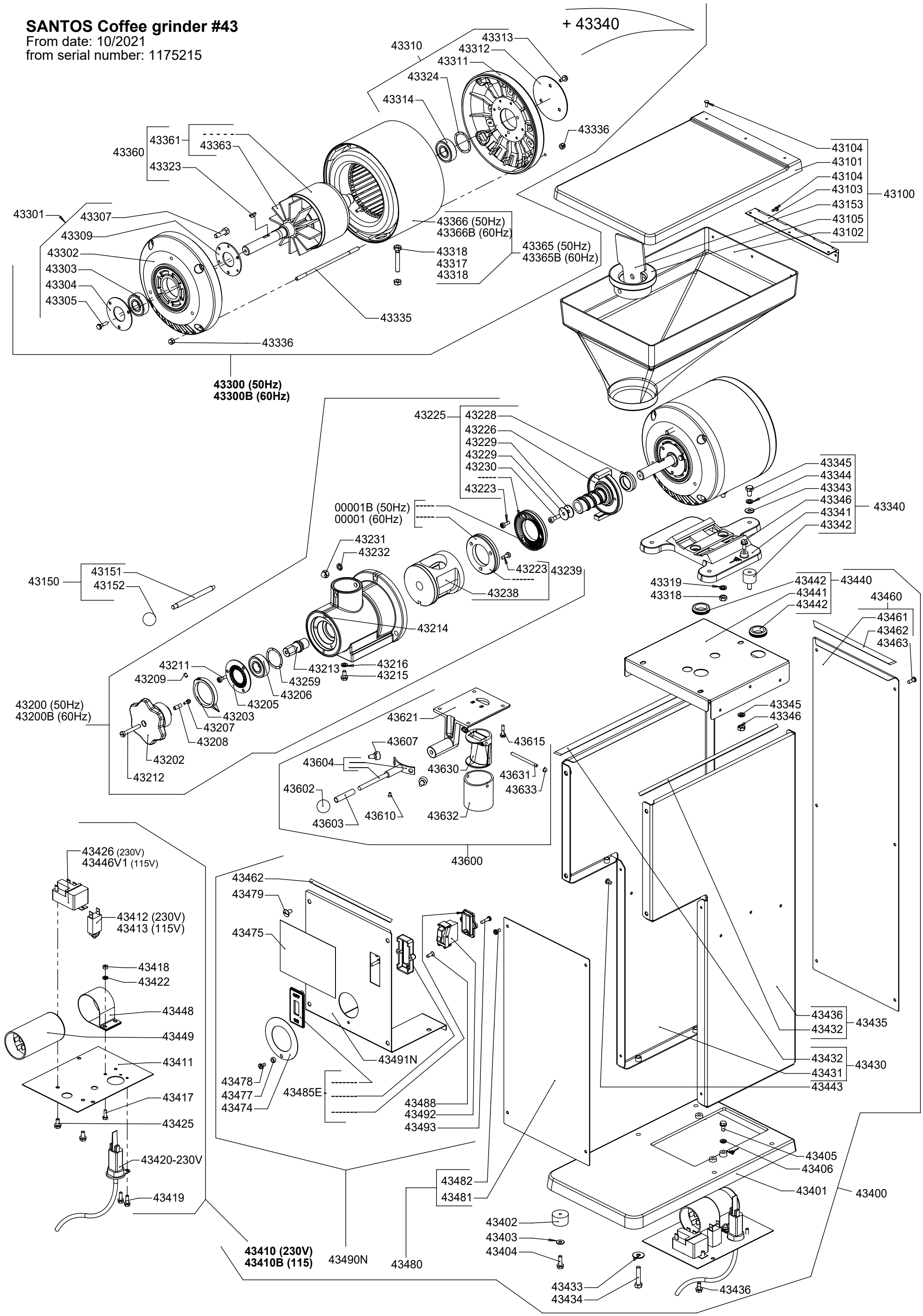SANTOS Coffee grinder #43
From date: 10/2021
from serial number: 1175215