SANTOS "CLASSIC" Citrus Juicer #11
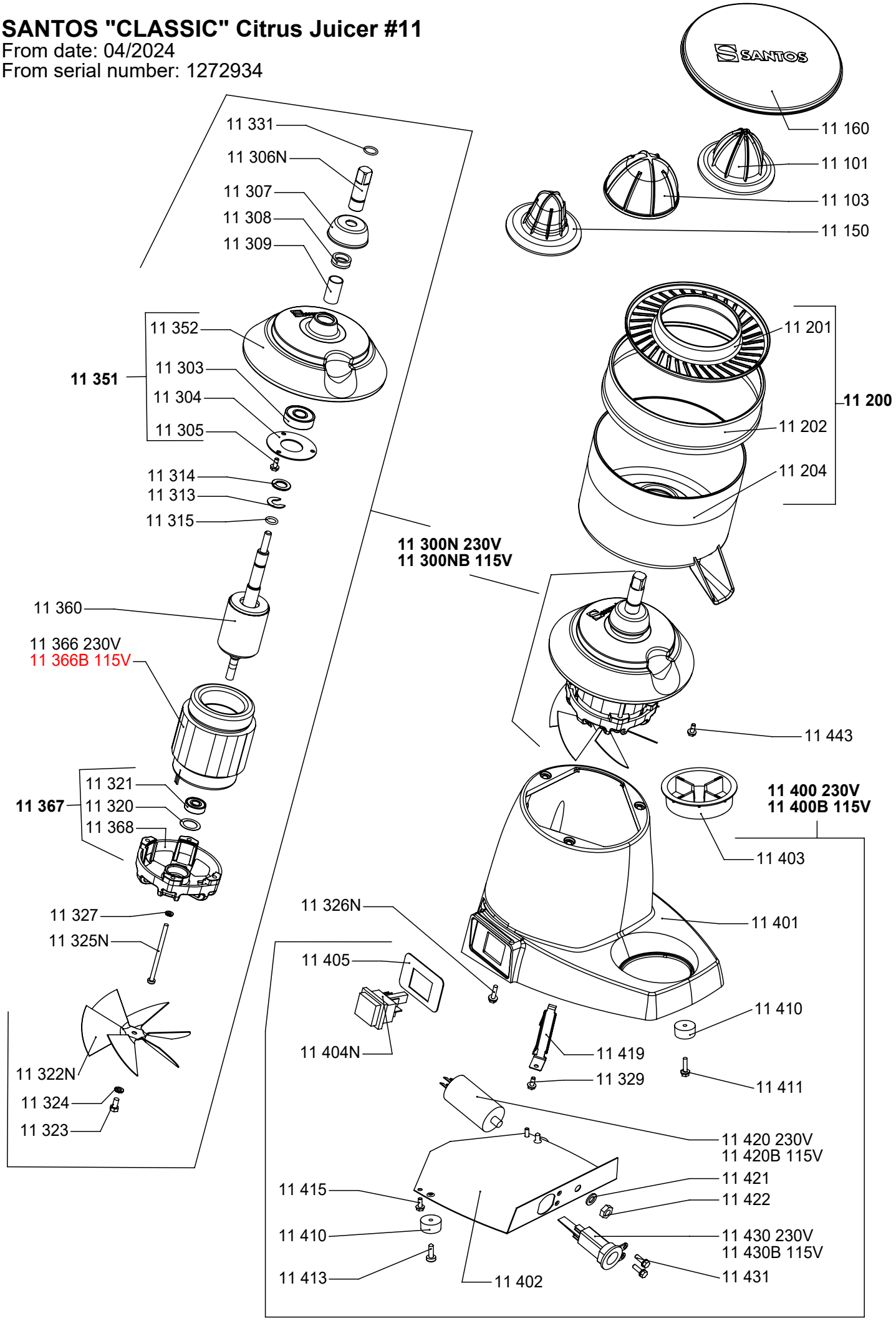
From date: 04/2024
From serial number: 1272934