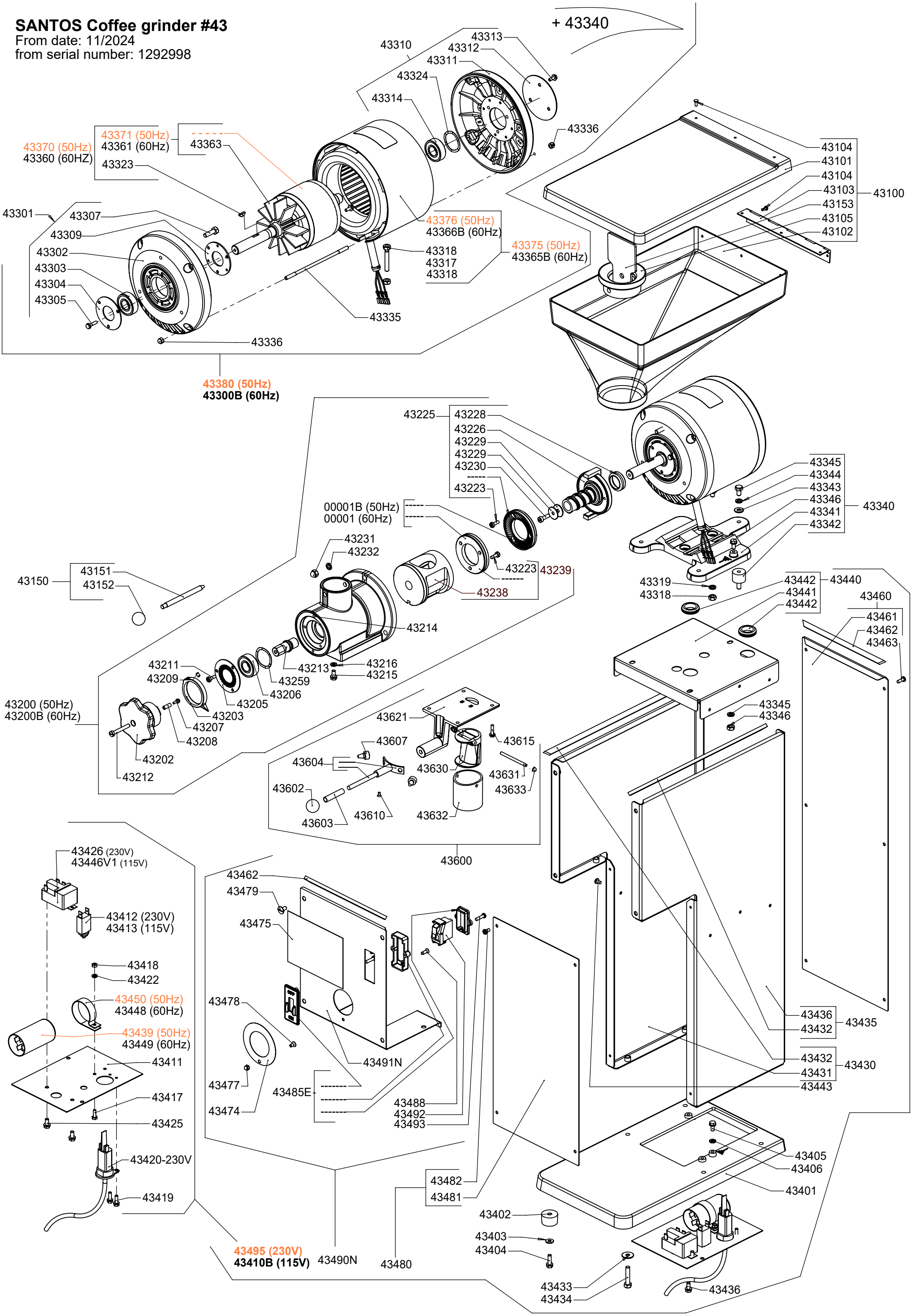SANTOS Coffee grinder #43
From date: 11/2024
from serial number: 1292998