SANTOS Meat mincer #12-8 / #12-12
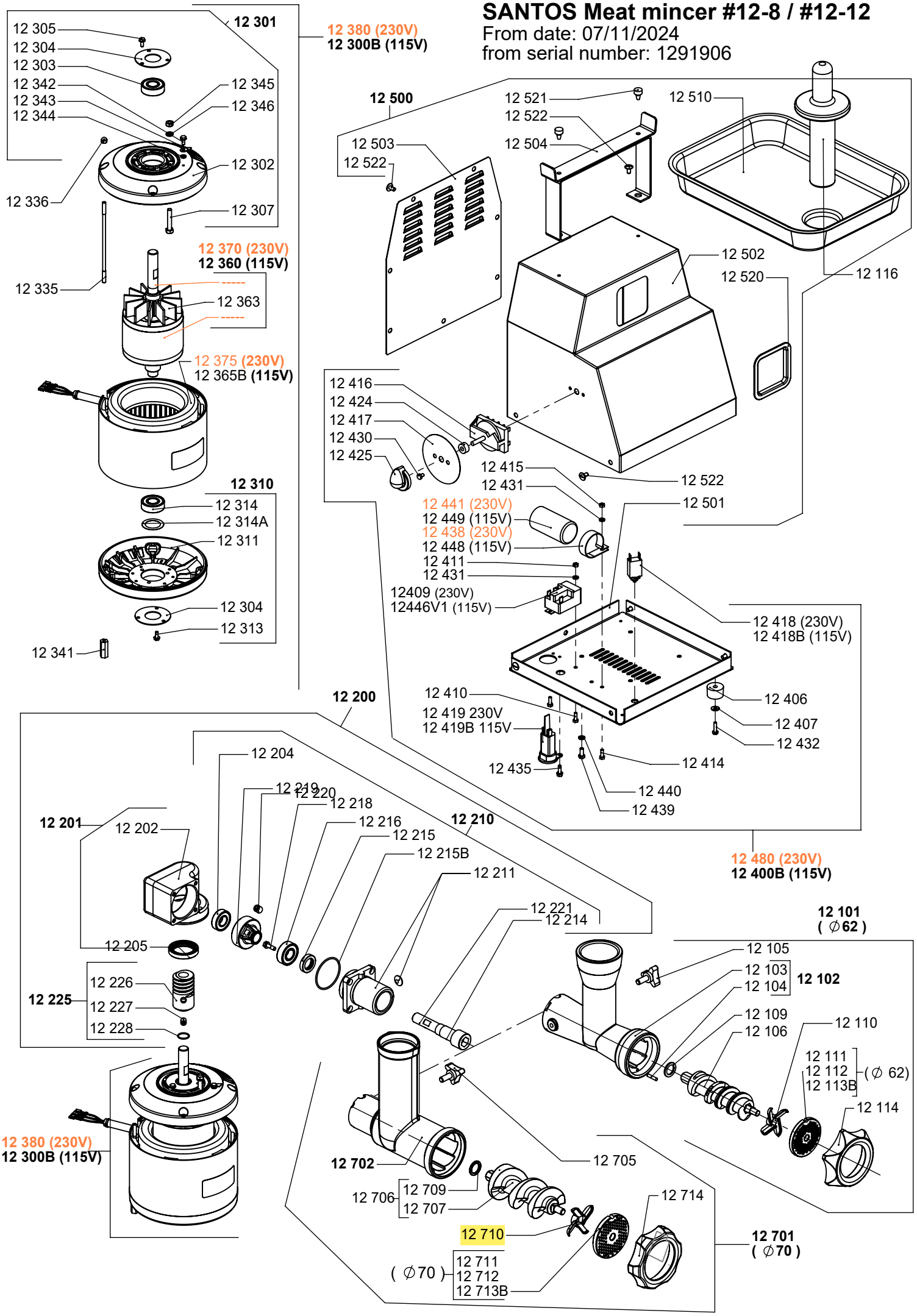
From date: 07/11/2024
from serial number: 1291906