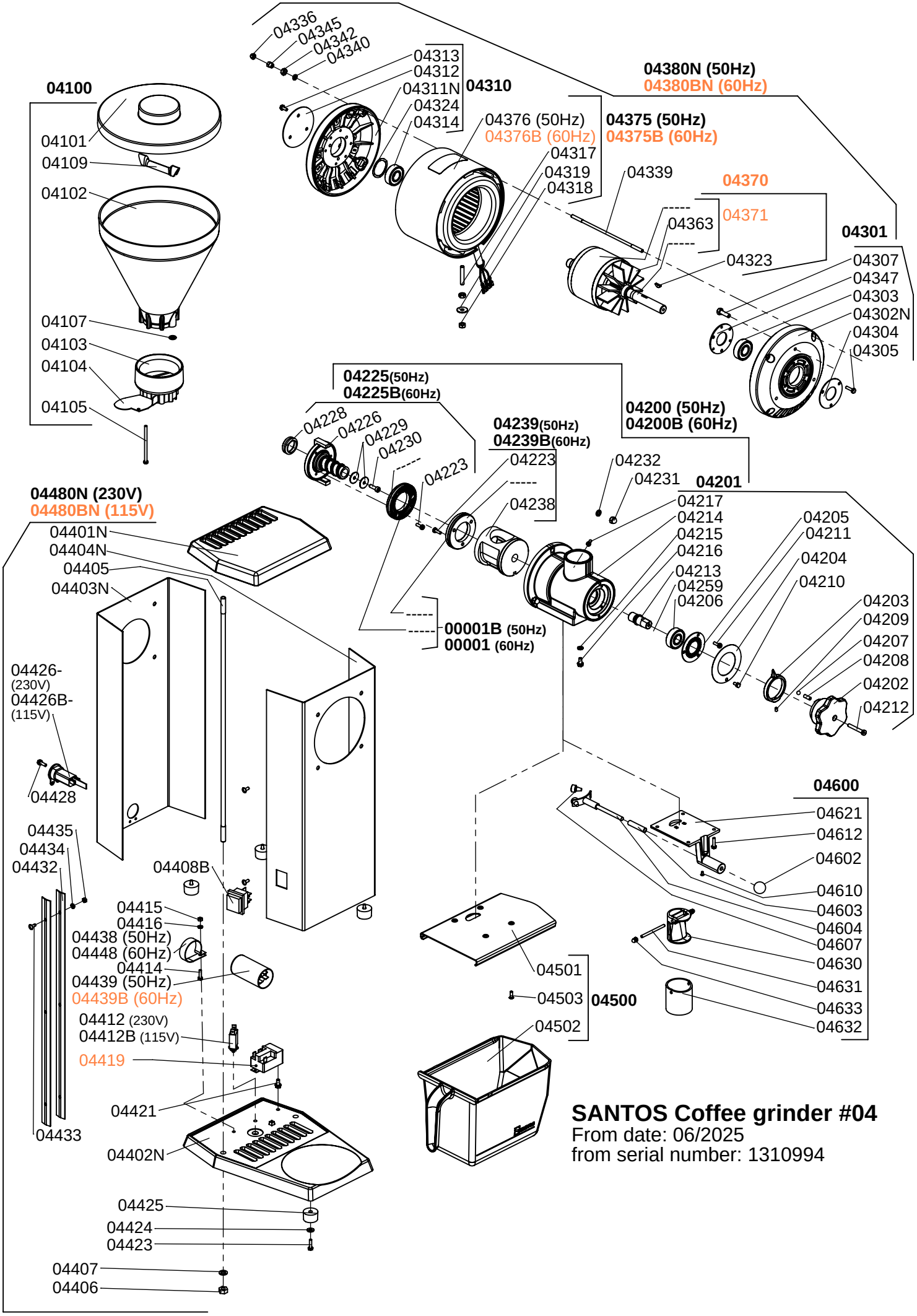

SANTOS Coffee grinder #04
From date: 06/2025
from serial number: 1310994