SANTOS Cheese grater #02 / Ice crusher #09
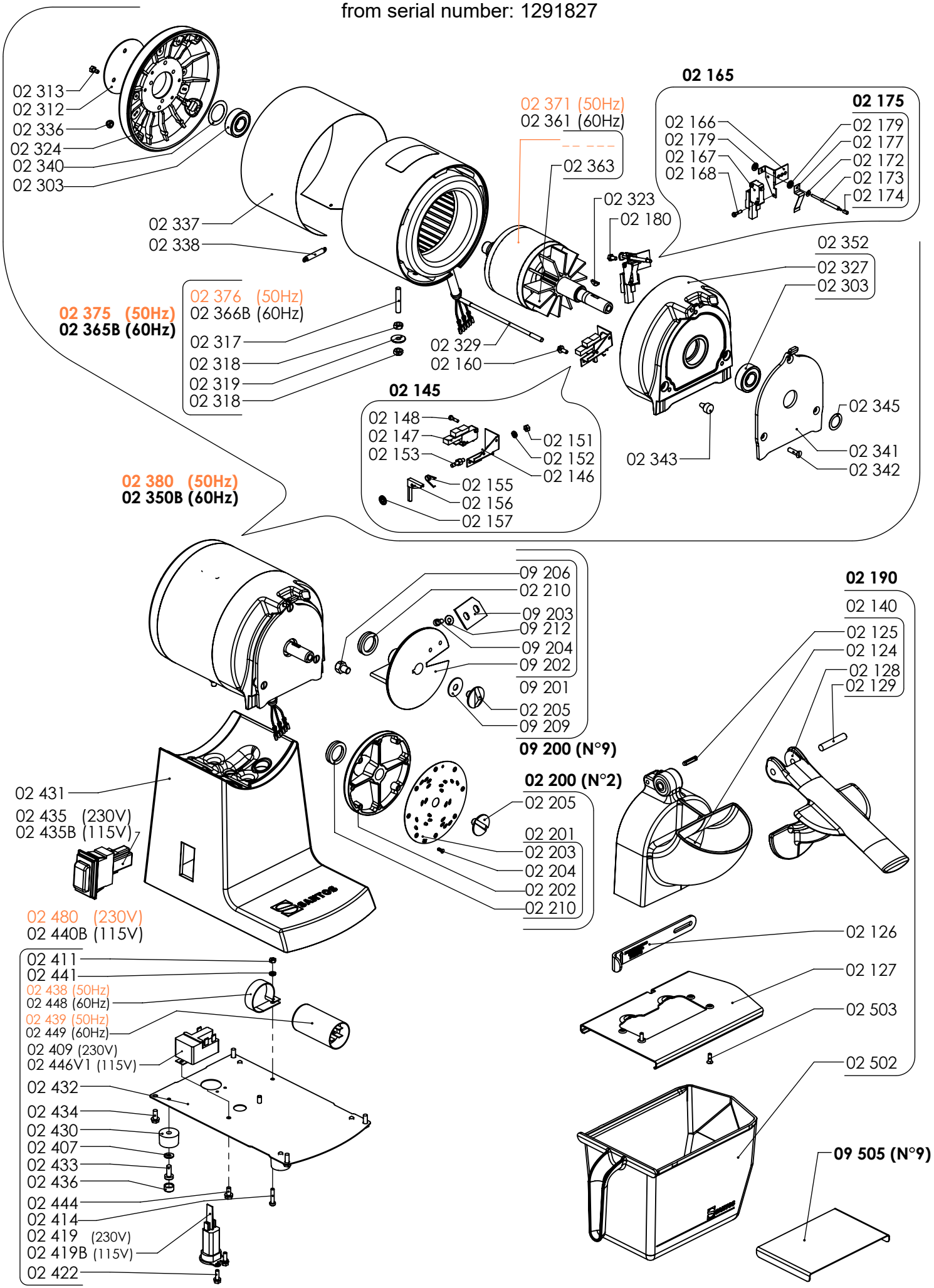
From date: 07/11/2024
from serial number: 1291827