SANTOS Coffee grinder #01
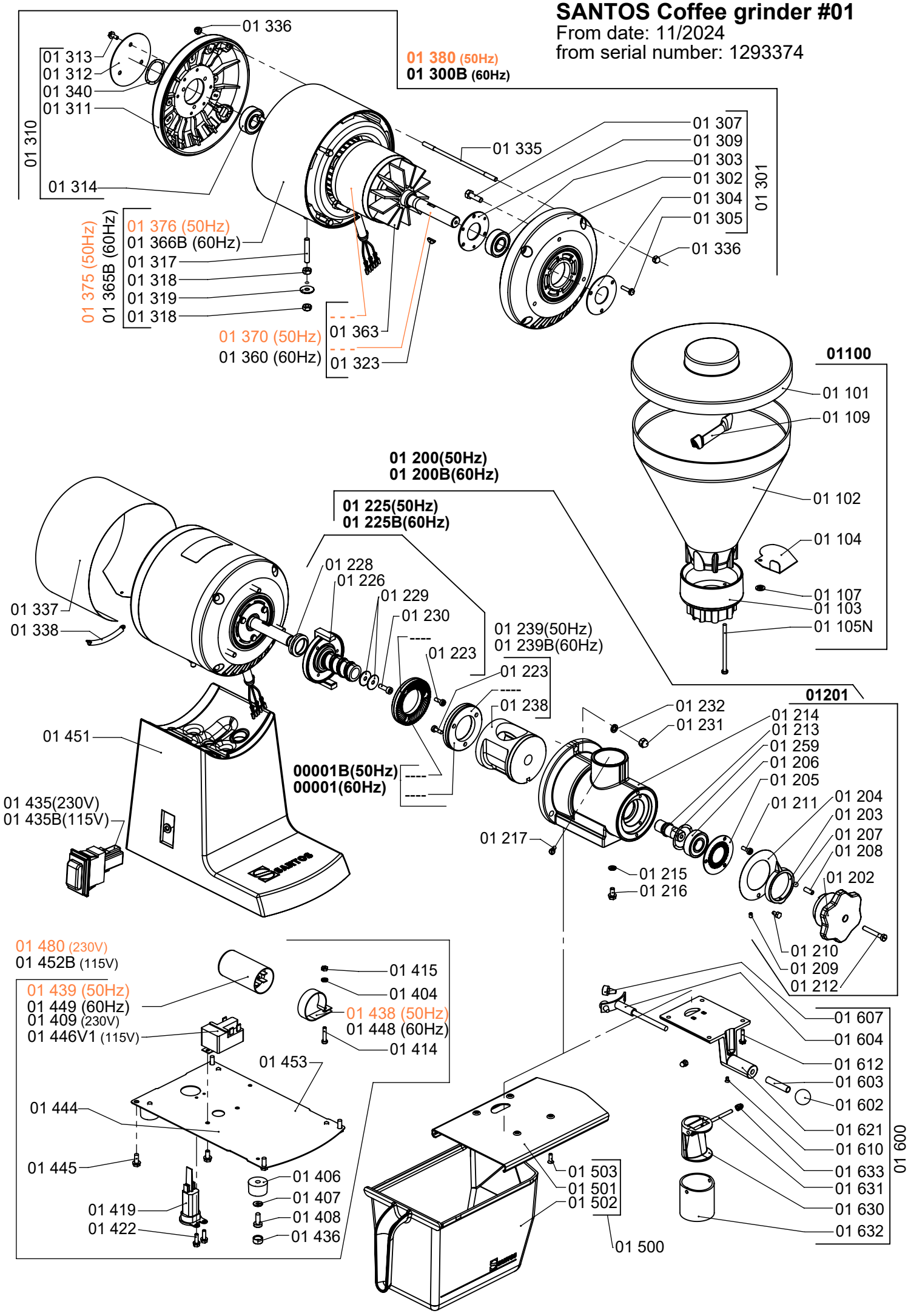
From date: 11/2024
from serial number: 1293374